EDISON LIGHTING GROUP

ED TRIAD+

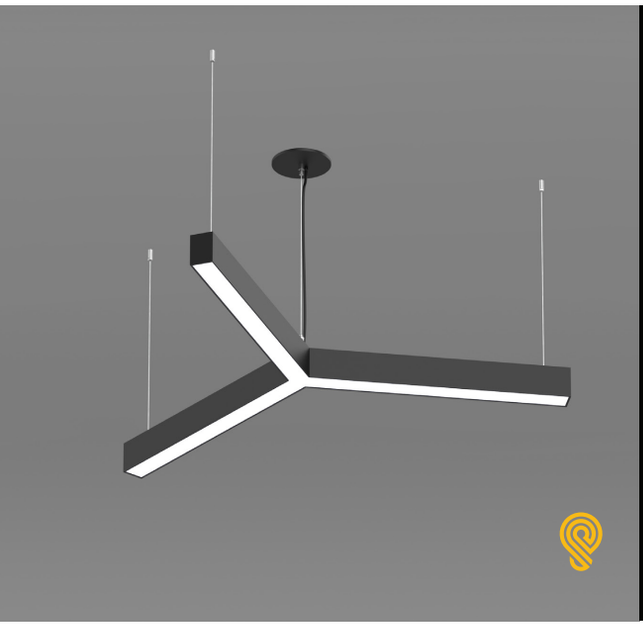

FEATURES:

- Architectural luminaire with direct distribution.
- Light source: LED board or LED strip.
- Even illumination is provided by a high-efficiency opal lens.
- Suitable for surface, suspended and recessed installations.
- Extruded aluminum body comes with a standard black or white finish.
- Also available with custom color options.
- LED strips are rated for 60,000 hrs. L80 with +90 CRI.
- Has a proven record in office, commercial and retail installations.
- Custom modifications are available.
- ED luminaires are certified to CSA and UL standards.

reinventlight

SPECIFICATION:

ED TRIAD+ [SIZE] — [SOURCE] — [RADIANCE] — [VOLTAGE] — [DRIVER] — [MOUNTING] — [LENS] — [FINISH] — [CCT] — [OPTIONS]

Enter the Product Code into the boxes above.

_____ ft

2-8 ft Arm length.

SOURCE
- ☐ 5W/ft
- ☐ 7W/ft
- ☐ 10W/ft

RADIANCE
- ☐ DD - Direct

VOLTAGE
- ☐ UNV - 120/277V
- ☐ 347V [1]

1. Verify availability.

DRIVER
- ☐ ST - On/Off
- ☐ DL - 0-10V Dim (1%)
- ☐ DLO - 0-10V Dim (to Off)
- ☐ DL2 - 0-10V Dim (TW)
- ☐ DLA - 0-10V Dim (Aux)
- ☐ DA4 - DALI D4i
- ☐ CV - Constant Voltage (RGBW)
- ☐ ____

Specify dimming protocol.

MOUNTING
- ☐ S6B - 6ft Cord BK [1]
- ☐ S6W - 6ft Cord WH [1]
- ☐ S ____ ft [2]
- ☐ SF - Surface Mount
- ☐ RT - Recessed Trimless

1. Canopy match the Cord color.
2. Specify Suspension length/color.

LENS
- ☐ OP - Opal

FINISH
- ☐ BK - Black[1]
- ☐ WH - White[2]
- ☐ CF/RAL ____

1. RAL 9005
2. RAL 9016

Specify required RAL number.

CCT
- ☐ 30K - 3000 Kelvin/90CRI
- ☐ 35K - 3500 Kelvin/90CRI
- ☐ 40K - 4000 Kelvin/90CRI
- ☐ RGBW[1]
- ☐ TW - Tunable White (27K-65K)[2]
- ☐ ____

1. Available with DMX or CB.
2. Available with DL2, DA4 or CB.

Specify required CCT.

OPTIONS
- ☐ No Options[1]
- ☐ EC - Emergency Circuit
- ☐ CB - Casambi Bluetooth(TW, RGBW)
- ☐ DMX - DMX (RGBW)
- ☐ AWN - Athena Wireless Node (DLA)

1. Leave empty.

LUMEN OUTPUT W/ft:

Watts	30K	35K	40K
5W	515lm	525lm	535lm
7W	720lm	735lm	750lm
10W	1030lm	1050lm	1080lm

Project:

Type:

905-830-0339 / 1-800-667-9281 | info@edisonlighting.ca | www.edisonlighting.ca

Specifications are subject to change without notice. Every effort has been made for accuracy and errors are unintentional.

EDISON LIGHTING GROUP

ED TRIAD+

SIZE:

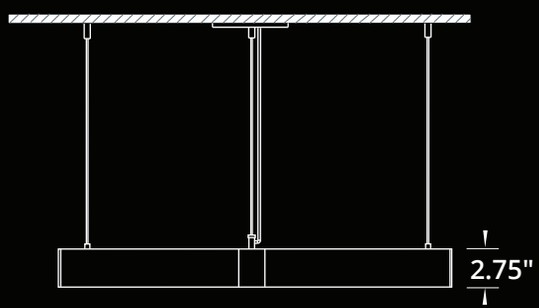

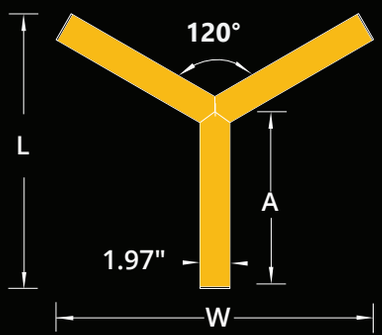

RADIANCE:

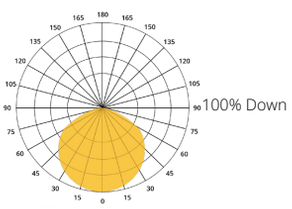

☐ Direct

MOUNTING:

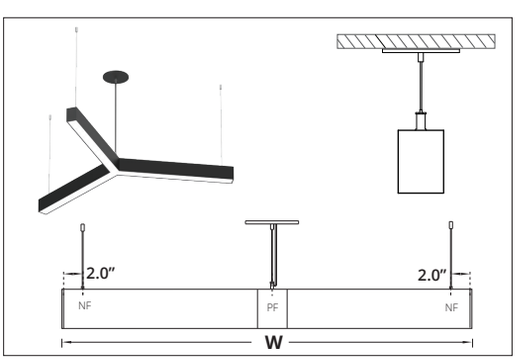

SUSPENDED

PF - Power Feed, center of the fixture.
NF - Non Power Feed

Size	A	L x W [1]
2 ft	24.45 in	37.53 x 43.33
3 ft	35.45 in	54.03 x 62.39
4 ft	48.20 in	73.15 x 84.47
5 ft	59.20 in	89.65 x 103.52
6 ft	71.95 in	108.78 x 125.61
7 ft	82.95 in	125.28 x 144.66
8 ft	95.70 in	144.40 x 166.74

A - Arm Length
L - Total Length
W - Total Width
1. All dimensions are in Inches.

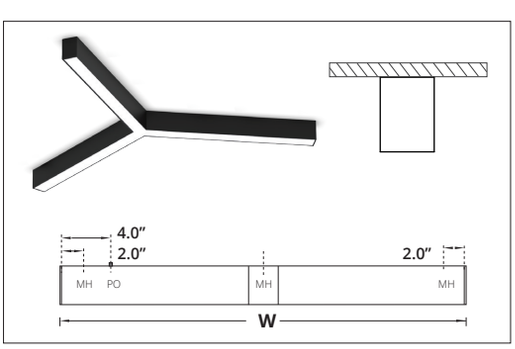

SURFACE MOUNT

PO - Power Opening
MH - Mounting Hole

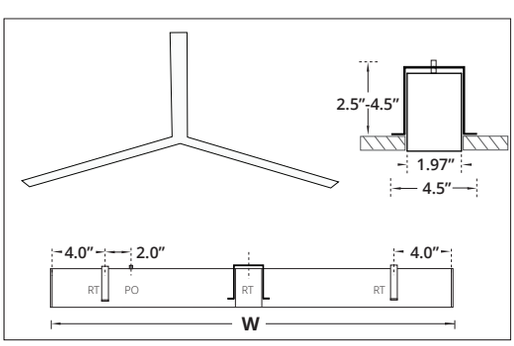

RECESSED TRIMLESS

PO - Power Opening
RT - Recessed Trimless Bracket
Cutout Dimensions = Total Length x Width of Extrusion.

905-830-0339 / 1-800-667-9281 | info@edisonlighting.ca | www.edisonlighting.ca

Specifications are subject to change without notice. Every effort has been made for accuracy and errors are unintentional.