EDISON LIGHTING GROUP

Sonic TRIAD+

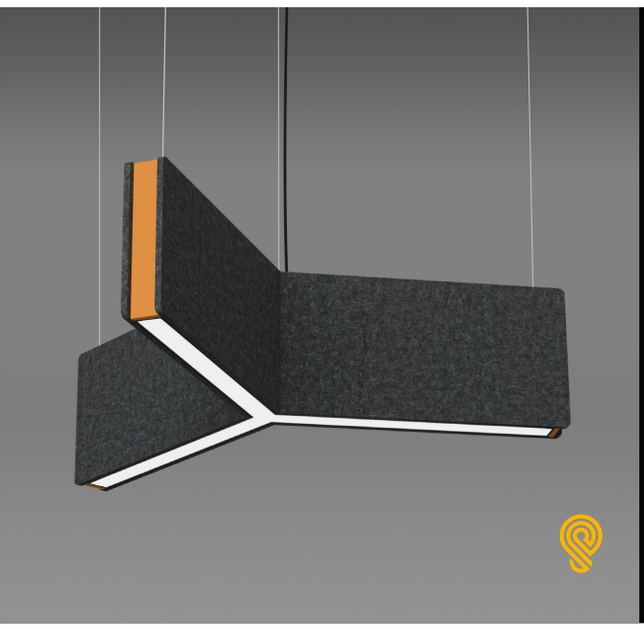

FEATURES:

- Architectural acoustic luminaire with direct lighting distribution.
- Made from recyclable plastic material available in different thicknesses.
- Class1 Fire rated with 0.7 Noise Reduction Coefficient/1" Acoustic.
- Light source: LED boards.
- Diffused illumination is provided by a high efficiency frosted opal lens.
- Extruded aluminum body comes with a built-in-driver and available in black or white finish.
- LED strips are rated for 60,000 hrs. L80 with +90 CRI.
- Has a proven record in office, commercial and retail installations.
- Custom modifications are available.
- ED luminaires are certified to CSA and UL standards.

reinventlight

SPECIFICATION:

Sonic TRIAD+ – [TYPE] – [HEIGHT] – [SIZE] – [SOURCE] – [RADIANCE] – [VOLTAGE] – [DRIVER] – [MOUNTING] – [LENS] – [TRIAD FINISH] – [CCT] – [ACOUSTIC] /

Enter the Product Code into the boxes above.

TYPE
- ☐ FC - Curved Edge
- ☐ FS - Square Edge

HEIGHT
- ☐ 12 in
- ☐ 16 in
- ☐ 24 in

SIZE
- ☐ 2 ft
- ☐ 3 ft
- ☐ 4 ft

SOURCE
- ☐ 5 W/ft
- ☐ 7 W/ft
- ☐ 10 W/ft

RADIANCE
- ☐ DD - Direct

VOLTAGE
- ☐ UNV - 120/277V
- ☐ 347V [1]

1. Verify availability.

DRIVER
- ☐ ST - On/Off
- ☐ DL - 0-10V Dim (1%)
- ☐ DLO - 0-10V Dim (to Off)
- ☐ DL2 - 0-10V Dim (TW)
- ☐ CV - Constant Voltage (RGBW)
- ☐ ____

Specify dimming protocol.

MOUNTING
- ☐ S6W - 6 ft Cord BK [1]
- ☐ S6B - 6 ft Cord WH [1]
- ☐ S ____ ft [2]

1. Canopy match the Cord color.
2. Specify Suspension length/color.

LENS
- ☐ OP - Opal

ED TRIAD+ FINISH
- ☐ BK - Black[1]
- ☐ WH - White[2]

1. RAL 9005
2. RAL 9016

CCT
- ☐ 30K - 3000 Kelvin/90CRI
- ☐ 35K - 3500 Kelvin/90CRI
- ☐ 40K - 4000 Kelvin/90CRI
- ☐ RGBW[1]
- ☐ TW - Tunable White (27K-65K)[2]
- ☐ ____

1. Available with CV.
2. Available with DL2.

Specify required CCT.

ACOUSTIC FINISH

Specify additional color for Two-Tone, for example 04/11.

01 Admiral Blue	02 Steel Grey	03 Light Marble	04 Charcoal	05 Sky Blue	06 Pumpkin Orange	07 Beige Cream	09 Midnight Black	11 Dandelion Yellow	12 Apple Green
15 Neon Green	18 Rhino Grey	24 Snow White	25 Poppy Red	26 Grape Purple	28 Ash Grey	30 Emerald Green	31 Forest Green	33 Shadow Marble	34 Dark Blue Marble

LUMEN OUTPUT W/ft:

Watts	30K	35K	40K
5 W	515 lm	525 lm	535 lm
7 W	720 lm	735 lm	750 lm
10 W	1030 lm	1050 lm	1080 lm

5 YEAR WARRANTY · Intertek · DIMMABLE · Declare.

Project:

Type:

905-830-0339 / 1-800-667-9281 | info@edisonlighting.ca | www.edisonlighting.ca

Specifications are subject to change without notice. Every effort has been made for accuracy and errors are unintentional.

EDISON LIGHTING GROUP

Sonic TRIAD+

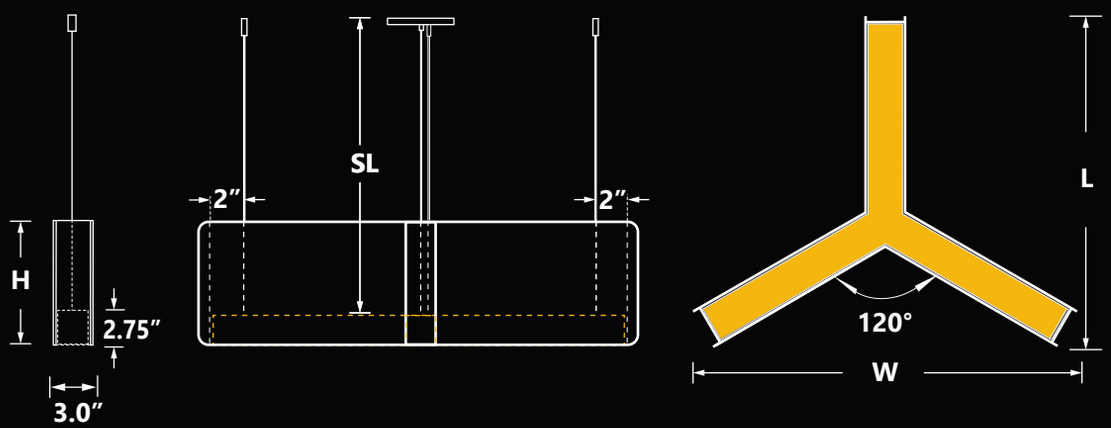

H	Height
12 in	11.75 in
16 in	15.75 in
24 in	23.75 in
Size	**L x W**
2 ft	40.00 in x 45.90 in
3 ft	56.20 in x 64.90 in
4 ft	75.40 in x 87.00 in

TYPE:

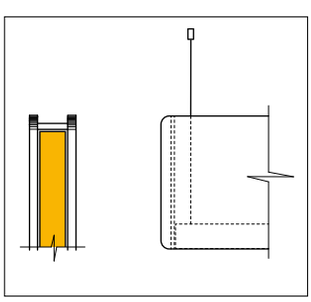

FC - Curved Edge

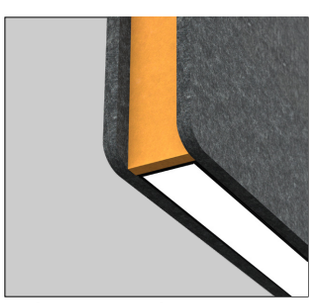

End Cap Detail

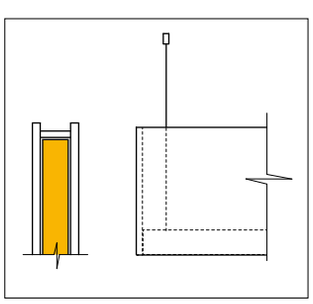

FS - Square Edge

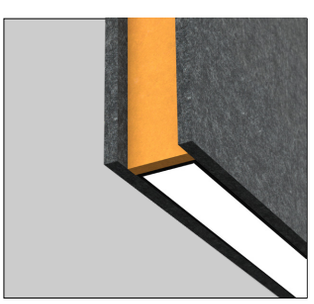

End Cap Detail

FINISHES:

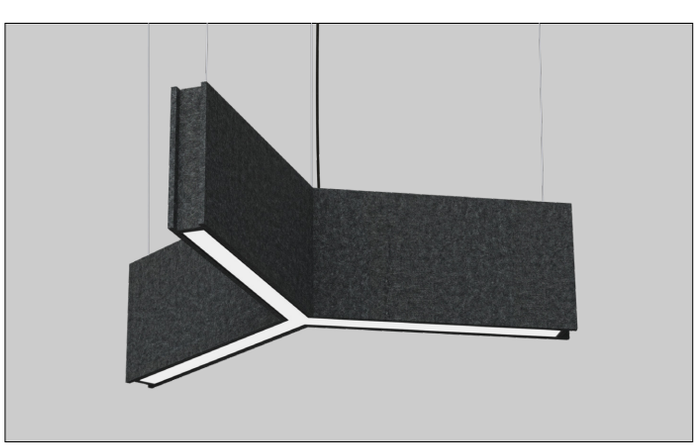

FS - 04

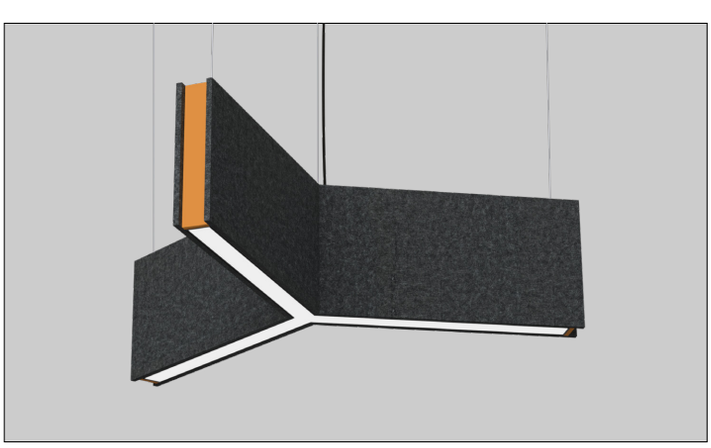

FS - 04/11

905-830-0339 / 1-800-667-9281 | info@edisonlighting.ca | www.edisonlighting.ca

Specifications are subject to change without notice. Every effort has been made for accuracy and errors are unintentional.